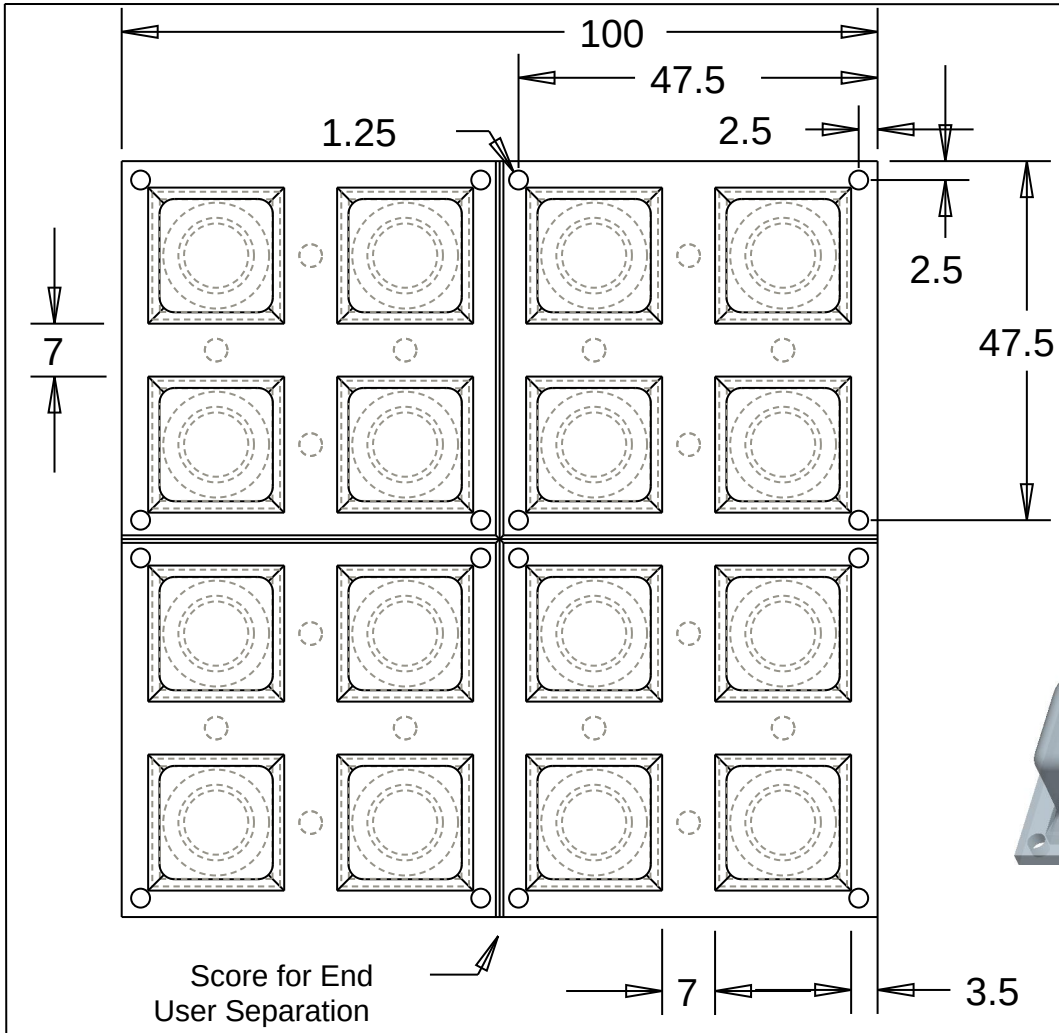

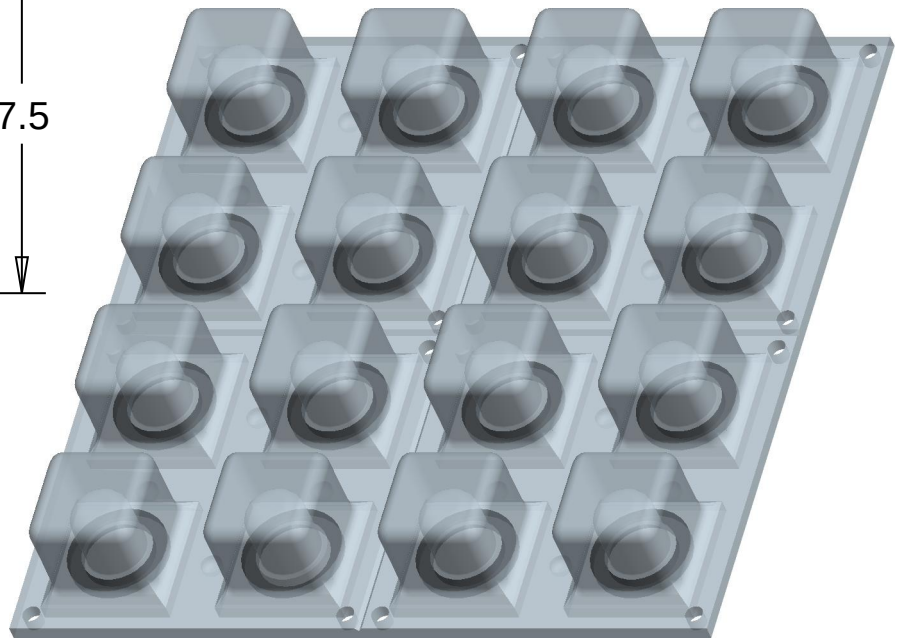

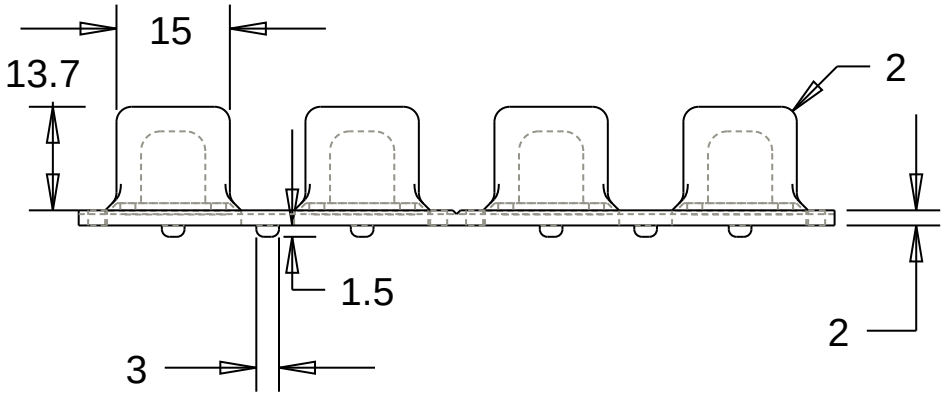

BUTTON_BASE_V0-1-3

Drawn by Casey Haskell for Spark Fun Electronics

Units Millimeter	Scale 1.000
	07 July 06