REV.	ECN.NO.	MODIFY.CONTENT	DATE
1	S0811093	Initial release edition	11.28/08
A	D0906.020	Formal release edition	06.03/09
B	ES.D0909.053	側面彈片增加凸包 Ⓑ	09/23'09

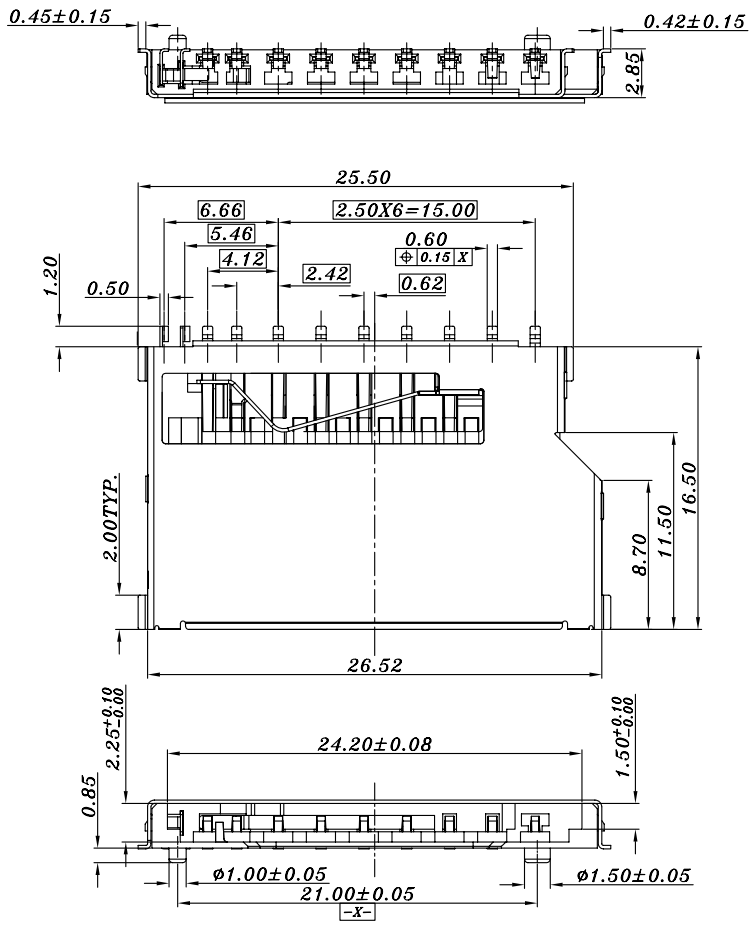

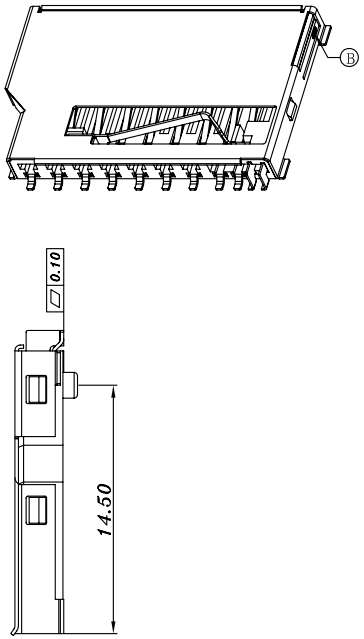

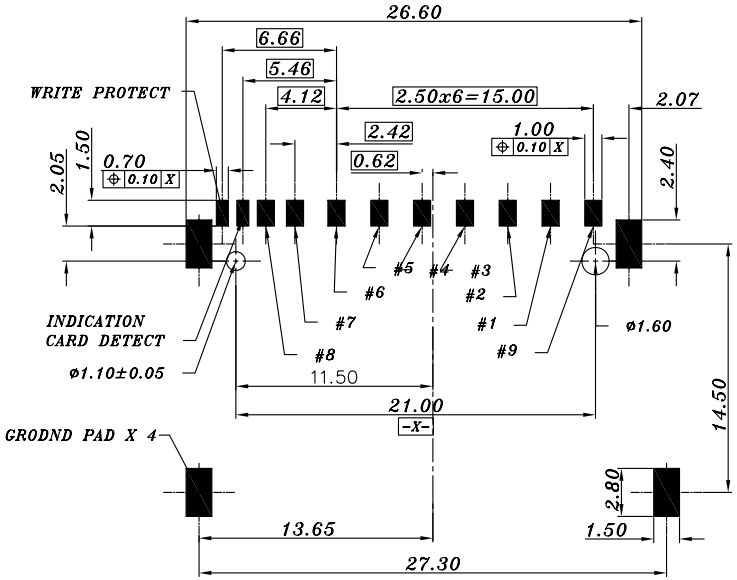

ALL TOLERANCE IS ±0.05mm

RECOMMENDED P.C.B LAYOUT (TOP VIEW)

10100708**

- 64 Gold 1u"on contact area,plated tin 100u"min on solder area
- 65 Gold 3u"on contact area,plated tin 100u"min on solder area
- 66 Gold 5u"on contact area,plated tin 100u"min on solder area
- 67 Gold 10u"on contact area,plated tin 100u"min on solder area
- 68 Gold 15u"on contact area,plated tin 100u"min on solder area

Notes:
1.All Dimensions are in Millimeters.
2.Operation voltage: 3.3 VAC max.
3.Current rating : 0.5 Amps max.
4.Contact resistance: 80 mohms max.
5.Insulation resistance: 1000M ohms min. 500 VDC
6.Dielectric withstanding voltage: 500 VAC / 1minute
7.Opterating Temperature: −20°C to +60°C
8.Storage Temperature: −40°C to +70°C
9.Material see table.
10. Total Mating Force : 40N (MAX) at 25 mm/minute
11.Total Unmating Force: SD:1N /MMC:2N (MIN) at 25 mm/minute
12.Single Pin Retation Force: 1.47N(MIN) at 25 mm/minute
13.Major Dimension: ▼

CIRCUIT	FUCTION	SD	MMC
PIN 1	SD-CD/DAT3 MMC-RSV	P1	P1
PIN 2	SD-CMD MMC-CMD	P2	P2
PIN 3	SD-VSS1 MMC-VSS1	P3	P3
PIN 4	SD-VDD MMC-VDD	P4	P4
PIN 5	SD-CLK MMC-CLK	P5	P5
PIN 6	SD-VSS2 MMC-VSS2	P6	P6
PIN 7	SD-DAT0 MMC-DAT	P7	P7
PIN 8	DAT1	P8	
PIN 9	DAT2	P9	

CIRCUIT:

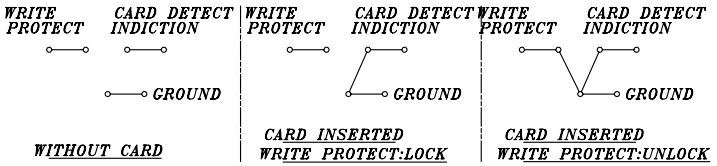

GENERAL	TOLERANCE	FILE.NO.	10100708	PART.NO.	10100708**	DRAWN	TANG	MATERIAL		SCALE	N/A
X.±0.50	x. °± 5 °	REV.	B	TITLE	SD+MMC Short Nature	CHECKED	JANE.YU	DATE	09.23/2009	UNIT	mm
.X±0.38	.x °± 2 °	SIZE									
.XX±0.25	.xx± 1 °	A4		SHEET	1 OF 1	APPROVED	SM.LIANG	Amphenol Shouhmin Industry			