920-132P-7IP	REVISIONS				
DRAWING NO.	REV	DESCRIPTION	DATE	ECO	APPR
THIRD ANGLE PROJ.	A	RELEASE TO MFG	11/20/02	44283	CPM
	B	SEE SHEET 1	2/21/08	46968	CPM
	C	PART ROBUSTNESS INCREASED	5/11/12	48718	DD

NOTES:

1. MATERIALS AND FINISHES:

BODY	- BRASS	- GOLD PLATED (.000010" MIN.)
CONTACT	- BRASS	- GOLD PLATED (.000030" MIN.)
BULLET BODY	- BERYLLIUM COPPER (STAMPED)	- GOLD PLATED (.000030" MIN.)
BULLET CONTACT	- BERYLLIUM COPPER (STAMPED)	- GOLD PLATED (.000030" MIN.)
SLEEVE	- BERYLLIUM COPPER	- GOLD PLATED
INSULATORS	- PTFE	

2. ELECTRICAL:

A. IMPEDANCE = 75 OHM, NOMINAL
B. FREQUENCY RANGE = DC TO 1.0 GHz
C. VSWR (RETURN LOSS) = 1.06 (30 dB) MAX

3. MECHANICAL:

A. DURABILTIY = 500 CYCLES MIN.
B. TEMPERATURE RANGE = -65° C TO +165° C
C. ENGAGEMENT FORCE = 5.0 LBS MAX.
DISENGAGEMENT FORCE = 0.5 LBS. MIN.

4. PACKAGING:

A. QUANTITY: SINGLE PACK
B. BAG TO BE MARKED: "AMPHENOL, 920-132P-7IP, AND DATE CODE"

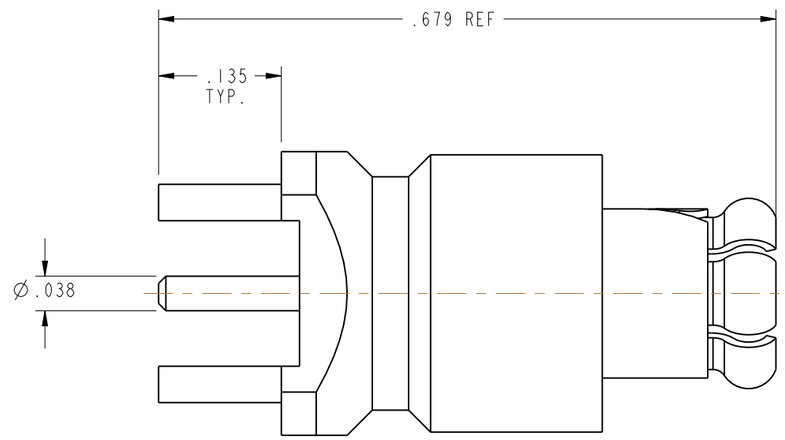

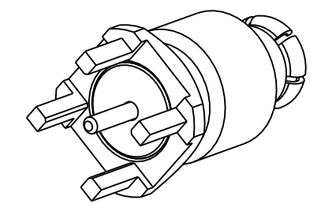

SCALE 3.000

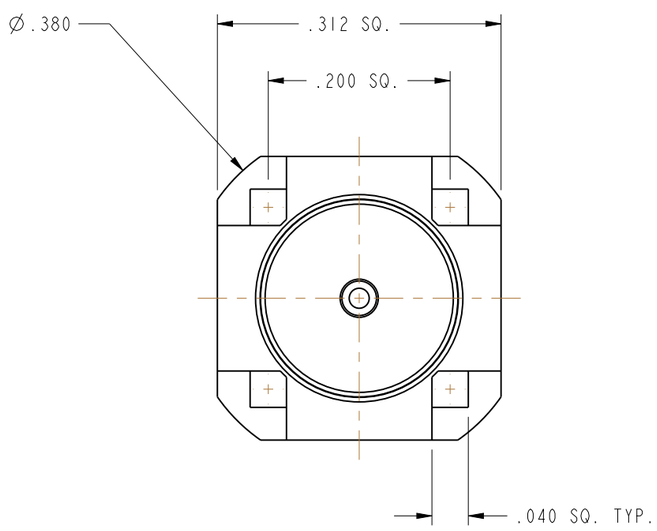

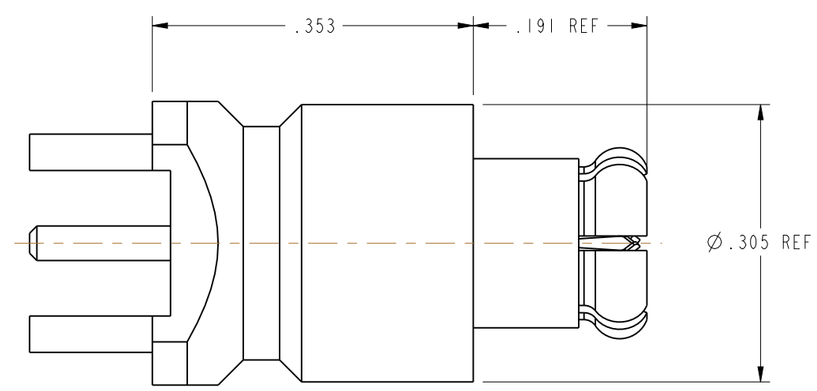

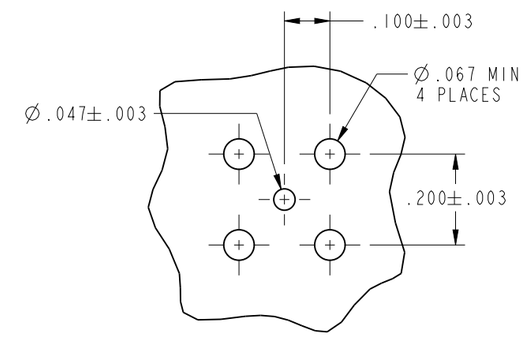

RECOMMENDED PCB MOUNTING HOLES

SCALE 3.000

CUSTOMER OUTLINE DRAWING

ALL OTHER SHEETS ARE FOR INTERNAL USE ONLY

UNLESS OTHERWISE SPECIFIED, DIMENSIONS ARE IN INCHES AND TOLERANCES ARE:
2 PLACE DECIMAL ±.015 (0,381 mm) | 3 PLACE DECIMAL ±.005 (0,127 mm) | ANGLES ± 1°

NOTICE - These drawings, specifications, or other data (1) are, and remain the property of Amphenol Corp. (2) must be returned upon request; and (3) are confidential and not to be disclosed to any person other than those to whom they are given by Amphenol Corp. The furnishing of these drawings, specifications, or other data by Amphenol Corp., or to any other person to anyone for any purpose is not to be regarded by implication or otherwise in any manner licensing, granting rights or permitting such holder or any other person to manufacture, use or sell any product, process or design, patented or otherwise, that may in any way be related to or disclosed by said drawings, specifications, or other data.

MATERIAL

REFERENCE
EAR# 638
GEN# ASSYF10_AF1
615X-1810-700
SIMILAR TO: 920-100P-7IP

DRAWN C. McGRATH	DATE 11/6/02	TITLE AF1 PCB W/ BULLET
ENGINEER MIKE HOYACK	DATE 11/6/02	
APPROVED O. BARTHELMES	DATE 11/20/02	
CAD FILE I:\AF1\920-132P-7IP		

Amphenol RF
Danbury, CT, USA
Tainan, Taiwan
Shenzhen, China
www.amphenolrf.com

CODE ID	DWG SIZE	DRAWING NO.	REV
74868	B	920-132P-7IP	C

SCALE: 6.0:1 | SHEET 2 OF 2