THIS COPY IS PROVIDED ON A RESTRICTED BASIS AND IS NOT TO BE USED IN ANY WAY DETRIMENTAL TO THE INTERESTS OF PANDUIT CORP.

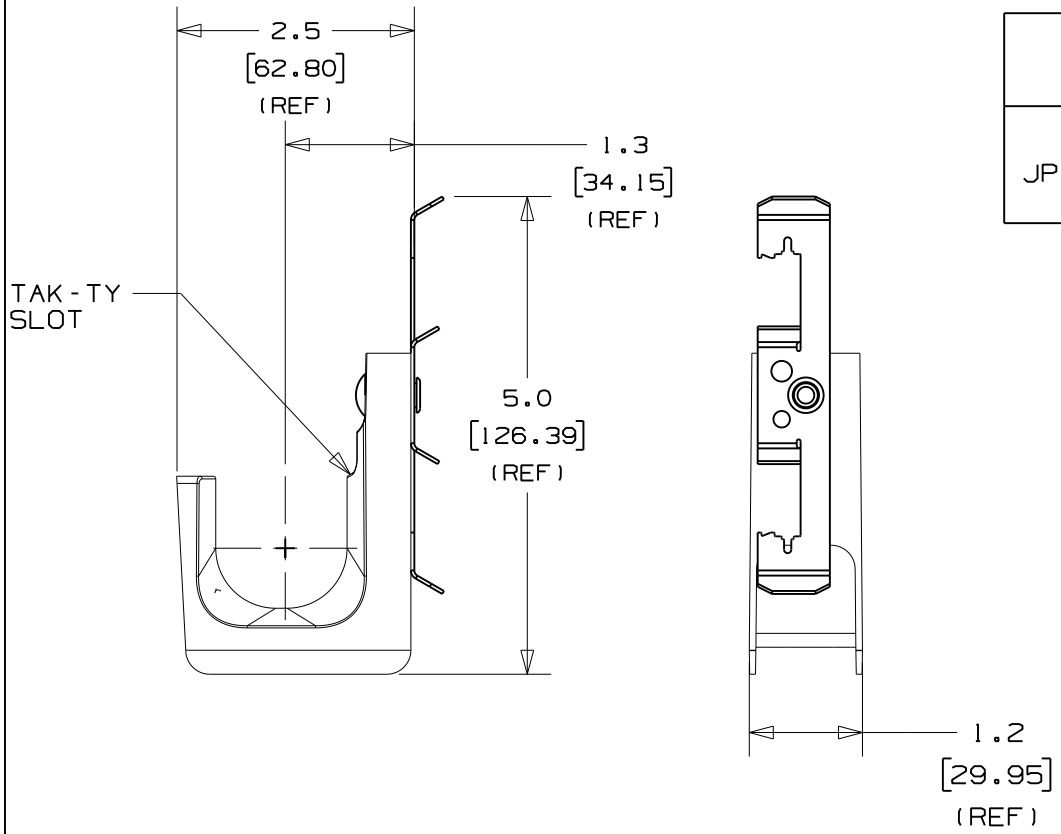

PANDUIT PART NO.	APPLICATION OPTIONS	WEIGHT lbs (g) 10 pcs
JP131DW-____	#12 WIRE, UP TO 3/8" DIAMETER THREADED ROD, OR 1/8"-3/8" FLANGES	0.9 (408.23)

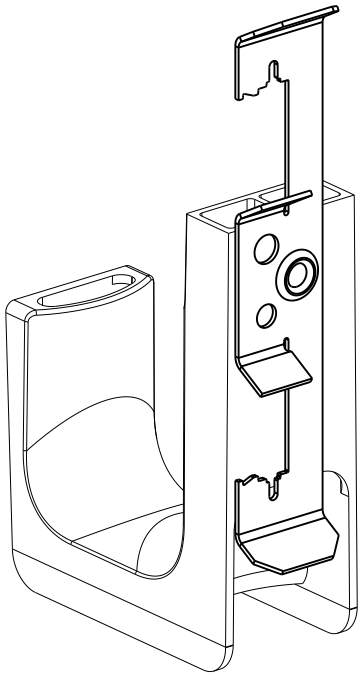

NOTES:
1. SEE CURRENT PRICE SHEET FOR PART NUMBER SUFFIX DESIGNATION FOR PACKAGE SIZE AND PRODUCT COLOR.
2. HOOK MATERIAL: NYLON 6/6
   RIVET MATERIAL: ALUMINUM
   CLIP MATERIAL: SPRING STEEL
3. PRODUCT IS DESIGNED TO SUPPORT A MAXIMUM OF 1 5/16" (33.34)) DIAMETER BUNDLE. MAXIMUM RECOMMENDED STATIC LOAD: 10 lbs.
4. PRODUCT INCORPORATES FEATURES ALLOWING USER TO RETAIN CABLE BUNDLES IN J-PRO J-HOOK WITH TAK-TY CABLE TIES UP TO 3/4" WIDE.
5. PRODUCT MARKINGS:
   cULus logo and statement:
   "SUITABLE FOR USE IN AIR HANDLING SPACES IN ACCORDANCE WITH SECTION 300-22 (C) & (D) OF THE NATIONAL ELECTRIC CODE."
   ULC logo and statement:
   "IN ACCORDANCE WITH CAN/ULC S-102.2 IN SINGLE UNITS OR PAIRS, 4 ft (1220mm) MIN. SPACING, FSR=0, SDC=20."

DIMENSIONS IN BRACKETS ARE METRIC [mm]

CAD FILENAME/LAYERS: 10K016DC_DC_GB3043CE/01A

PANDUIT CORP. TINLEY PARK, ILLINOIS

J-PRO J-HOOK DROP WIRE AND THREADED ROD CLIP (JP131DW-___)

UNLESS OTHERWISE SPECIFIED, DIMENSIONAL TOLERANCES ARE:
(.X) ±0.05 [1.3] (.XXX) ±0.010 [0.25]
(.XX) ±0.02 [0.5] ANGLES ± 5°

UNLESS OTHERWISE SPECIFIED, ALL DIMENSIONS ARE GIVEN IN INCHES, THIRD ANGLE PROJECTION.

REV	DATE	BY	CHK	DESCRIPTION	ECN - R		CUST	SUP	QC
01A	09/21/10	GDH	DJW	REVISED DIMENSIONS, UPDATED TO TEAMCENTER FORMAT	GB3043CE	01A	KLN		
R	1/19/06	JAD		INITIAL RELEASE	GB3043CE	R			

DRAWN BY: JAD
DATE: 1/19/06
CHK'D: KLN
MAT'L: SEE NOTE 2
SCALE: NONE
DRAWING NO.: GB3043CE
DWG SIZE: A