THIS DOCUMENT IS THE PROPERTY OF KEYSTONE ELECTRONICS CORP. AND SHALL NOT BE REPRODUCED, DISTRIBUTED OR USED AS A BASIS FOR MANUFACTURE WITHOUT PRIOR WRITTEN PERMISSION FROM KEYSTONE ELECTRONICS CORP.

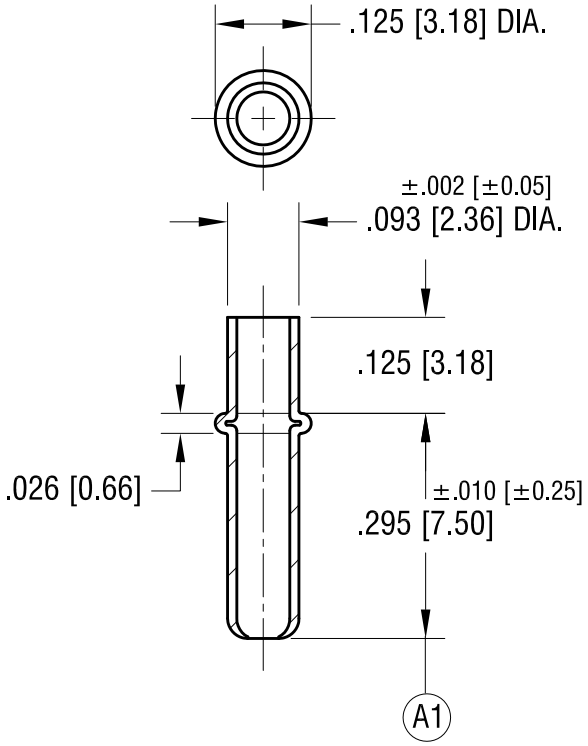

DATE	DESCRIPTION	REV.
3.12.15	A1 WAS .293 [7.44]±.005 [±0.13] CHANGE AS PER ECN 15-028	A

KEYSTONE ELECTRONICS CORP.

www.keyelco.com • ASTORIA, N.Y. 11105-2017 • Tel (718) 956-8900

PART NAME	CONTACT PIN, SEAMLESS		
MATERIAL	BRASS		
FINISH	NICKEL PLATE	DRN BY BOONE	DATE 7.16.07
		APP'D LN	SCALE 4X
TOLERANCES INCH [MM] DECIMAL ± .005 [± 0.13] ANGULAR ± 1° UNLESS OTHERWISE SPECIFIED	CODE C	DWG NO. 1223	