THIS COPY IS PROVIDED ON A RESTRICTED BASIS AND IS NOT TO BE USED IN ANY WAY DETRIMENTAL TO THE INTERESTS OF PANDUIT CORP.

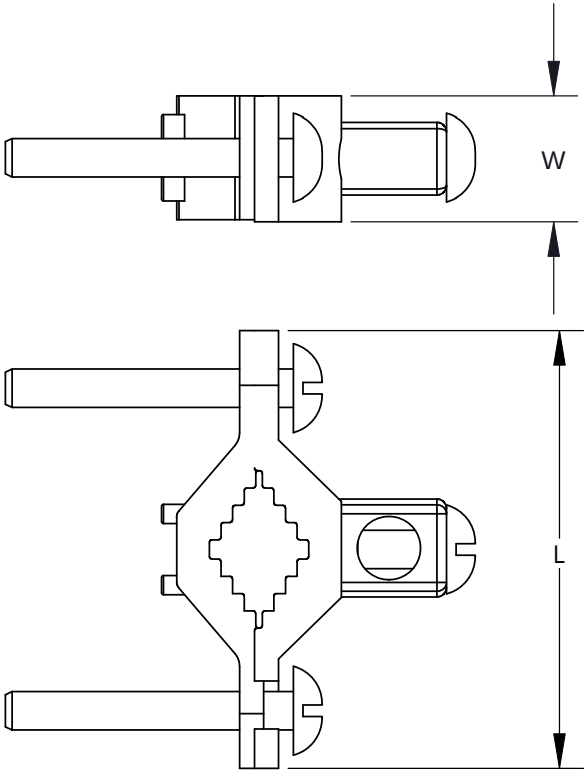

C UL US
467
LISTED
NOT SUITABLE FOR DIRECT BURIAL

NOTES:

1. CAST FROM HIGH STRENGTH ELECTRICAL BRONZE. FURNISHED WITH HIGH STRENGTH PLATED STEEL HARDWARE.
2. FOR BONDING BARE COPPER WIRE TO WATER PIPE OR FOR USE AS A WATER METER SHUNT.
3. SLOTTED SCREWS
4. PACKAGE QTY: -L = 50
   -C = 100

CATALOG NUMBER	WATER PIPE RANGE IN.	CONDUCTOR RANGE OF TAP	WIRE DIAMETER RANGE	L	W
KP1-C	1/2"-1"	10 SOL. - 2 STR.	.102 - .292	2.28	0.66
KP2-L	1-1/4"-2"	10 SOL. - 2 STR.	.102 - .292	3.58	0.73

REV	DATE	BY	CHK	DESCRIPTION	ECN	-R	SUP
05	1/11	JHNU	JHNU	REVISED FORMAT OF WATER PIPE RANGE	N41217BA-C41217	FLD	FLD
04	12/10	JHNU	JHNU	REVISED UL LOGO TO STATE 'NOT SUITABLE FOR DIRECT BURIAL'	N41217BA-C41217	FLD	FLD
03	12/08	JHNU	JHNU	REMOVED PACKAGING CODE "E" FROM DRAWING			
02	10/08	JHNU	JHNU	REVISED UL LISTING CONVERTED DWG. TO SOLIDWORKS			
01	2/05	JHNU		REMOVED PART NUMBER KP4-E FROM DRAWING			
00	7/97	TM	WJB	DWG. RELEASED	06029		

PANDUIT CORP. TINLEY PARK, ILLINOIS

BRONZE GROUND CLAMP, KP SERIES
CUSTOMER DRAWING

UNLESS OTHERWISE SPECIFIED DIMENSIONAL TOLERANCES ARE:
(.X) ± (.XXX) ±
(.XX) ± ANGLES ±

UNLESS OTHERWISE SPECIFIED, ALL DIMENSIONS ARE GIVEN IN INCHES, THIRD ANGLE PROJECTION

DRAWN BY
DATE
CHK'D N/A

MAT'L: SEE NOTE 1 ABOVE

SCALE

DRAWING NO / CAD FILE C41217_05

DWG A SIZE